ITEM NO.	PART NUMBER	DESCRIPTION	QTY.
1	BK2007	ISO caliper mount, universal Hi/Lo, relieved (1018 steel)	1

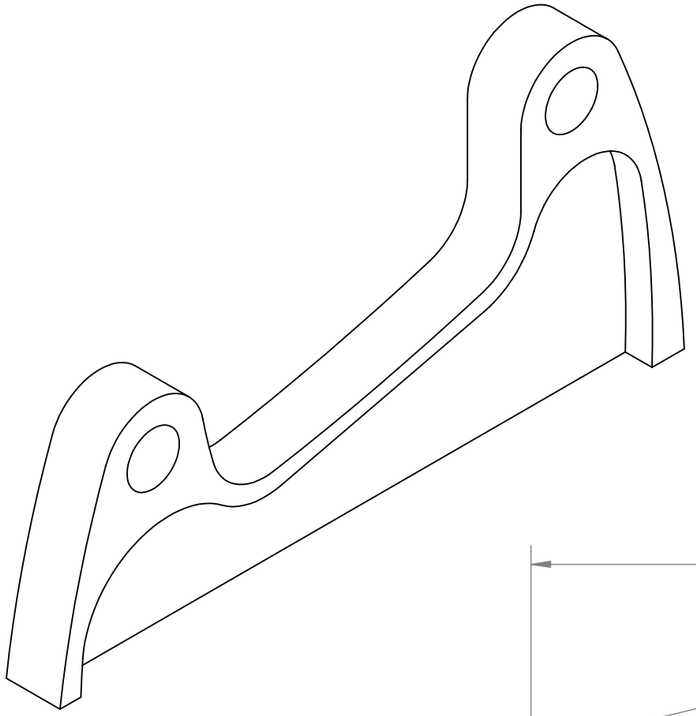

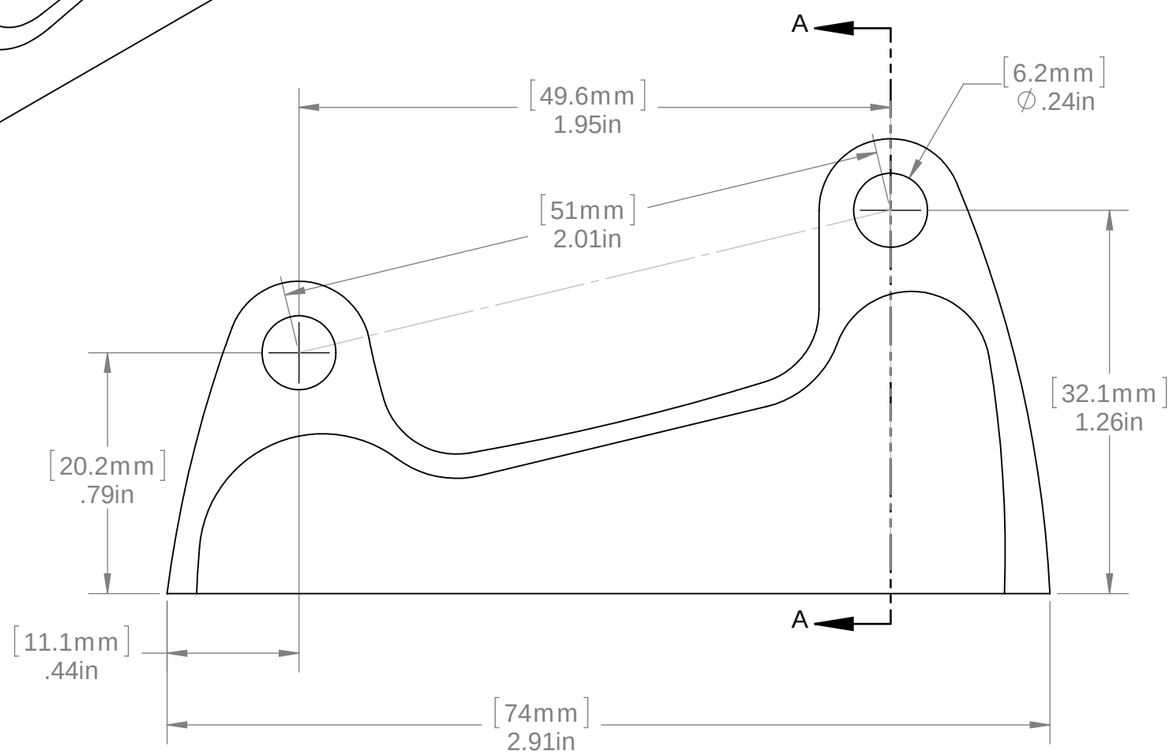

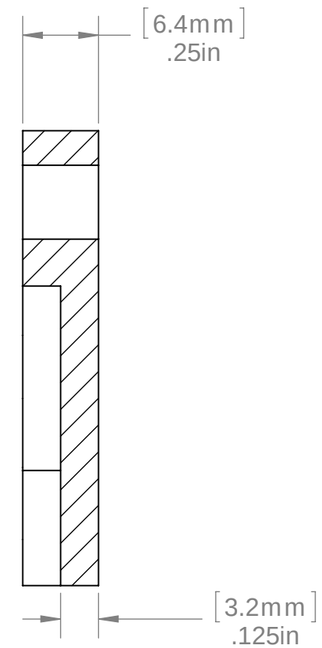

SECTION A-A

PROPRIETARY AND CONFIDENTIAL

THE INFORMATION CONTAINED IN THIS DRAWING IS PROVIDED FOR FRAMEBUILDERS AND IS THE SOLE PROPERTY OF PARAGON MACHINE WORKS. ANY REPRODUCTION IN PART OR AS A WHOLE WITHOUT THE WRITTEN PERMISSION OF PARAGON MACHINE WORKS IS PROHIBITED.

NEXT ASSY	USED ON
APPLICATION	

UNLESS OTHERWISE SPECIFIED:

DIMENSIONS ARE IN INCHES
TOLERANCES:
FRACTIONAL ±
ANGULAR: MACH ± BEND ±
TWO PLACE DECIMAL ±
THREE PLACE DECIMAL ±

INTERPRET GEOMETRIC TOLERANCING PER:

MATERIAL

FINISH

DO NOT SCALE DRAWING

	NAME	DATE
DRAWN	J.McW.	2012
CHECKED		
ENG APPR.		
MFG APPR.		
Q.A.		

COMMENTS:

Paragon Machine Works

TITLE:
universal ISO mount
Hi/Lo relieved

SIZE	DWG. NO.	REV
B	BK2007	

SCALE: 2:1 WEIGHT: SHEET 1 OF 1